Attachment A.

Sec. 4.16. The Seabrook town center commercial development overlay district regulations.

4.16.01. Purpose: The Seabrook Town Center Commercial Development Overlay District ("STCOD") is intended to promote an attractive mixed-use retail commercial development exhibiting an overall desirable appearance with enduring quality. The overlay will provide direction to the tenant/owner/developer by defining certain design elements and areas which should be common to the project and will unify its overall design. The standards that follow allow for and promote design integration. The city has conducted extensive study for the purposes of establishing the regulations that follow:

4.16.02. Applicability: All new developments and changes to existing developments in the district that require site plan or building permit approval are subject to the requirements of the overlay district in addition to other applicable regulations in the City's Code of Ordinances. Nothing contained in this section 4.16 shall be deemed to reduce applicable requirements contained in other sections of this Code, or any ordinance specifically applicable to a development (e.g., conditional use permit or planned unit development), but instead to enhance the aesthetics and associated uses of this overlay district.

4.16.03. Boundaries of the overlay district: The Seabrook Town Center Commercial Development overlay district ("STCOD") shall consist of the area lying west of the western edge of (State Highway 146 right-of-way, north of Vermillion Drive rear property lines, east of Loch Lake Drive rear property lines, east of Ed White Elementary School, south of Oak Dale Way rear property lines, and south of Seabrook Methodist Church.

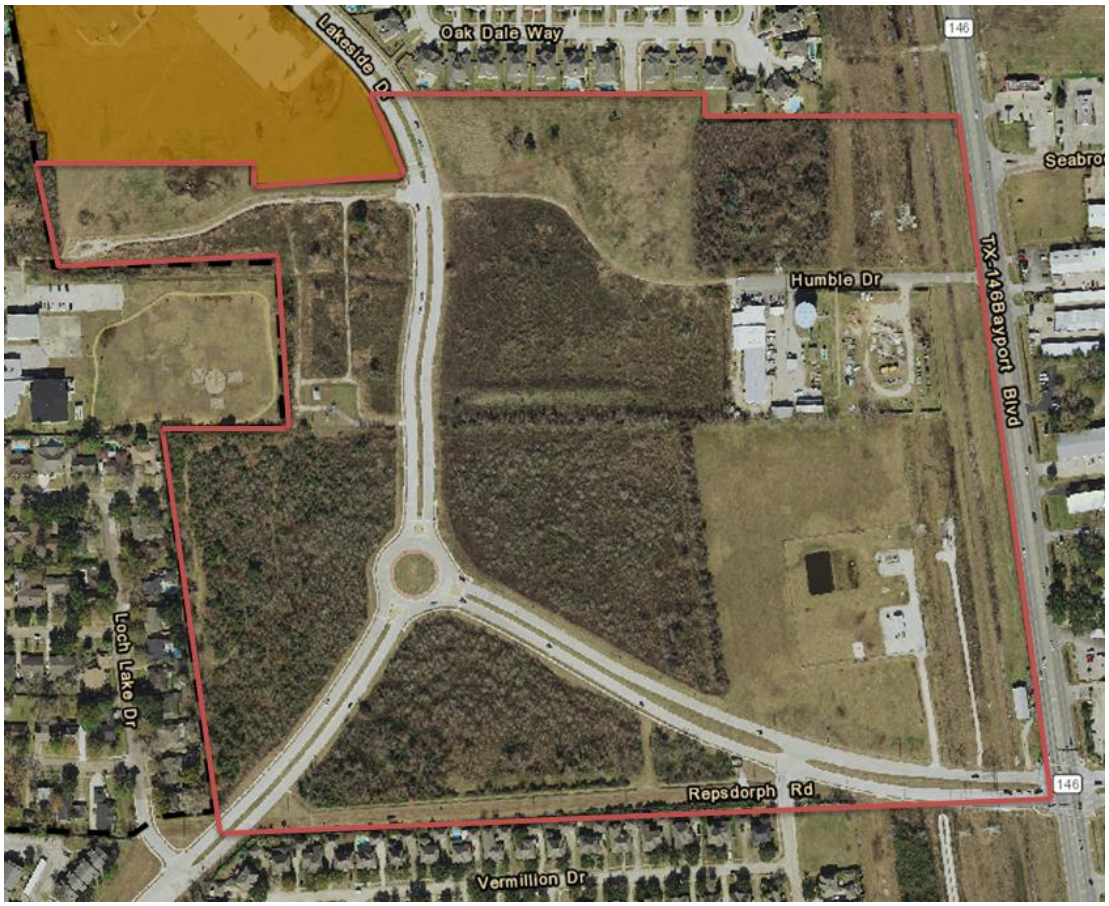

*4.*16.04. *Submission and plan review procedures:*

A. Application submittals*:* A completed building permit application form and three (3) sets of plans printed at a standard architectural sheet size of a minimum of (24”X 36”) along with one electronic copy in PDF format, and include the following:

1. Site Survey.

2. Site improvement details such as building(s), parking lot(s) and or garage, curbing, walks, culvert, fences, water quality elements, screens, and mechanical equipment.

3. Civil plans that include existing and proposed grades and wet/dry utilities with sizes and locations.

4. Building plans and elevations (one copy of a colored elevation is needed). Samples of all exterior building materials to show color, texture, and finish.

5. A separate Landscape Plan(s) showing all vegetation setbacks, existing and proposed plant material, and irrigation to be installed (irrigation should be to shoulder of road within jurisdictional codes, ordinances, etc).

6. Site and exterior building Lighting Plan with Lumens per acre calculations and photo metrics including average light levels achieved.

7. Location and details for all exterior signage whether freestanding or building mounted (Signage Plan).

8. Construction access and staging areas.

4.16.05. Uses: Uses permitted by right and by conditional use shall be governed by Section 3.15, “Comprehensive land use regulation matrix” STCOD District.

4.16.06. Area Regulations:

Street Setback Criteria						
	Landscape & Parking Setbacks			**Building Setbacks**		
	Front	Side**	Rear	Front	Side*	Rear
Streets						
SH 146	20’	5’	5’	40’	40’	10’
Repsdorph	15’	5’	5’	25’	25’	10’
Lakeside	15’	5’	5’	25’	25’	10’

*For Lots where buildings abut each other for a contiguous shopping center, the Building Side Setback can be 0’.

**For Lots where the lot line runs in the middle of a driveway for a contiguous shopping center, the Landscape Setback can be 0'.

	Side Building Setback Requirements			
Land Use	Adjoining Thoroughfare	Adjoining Collector	Adjoining R-1 – R-2 Single Family	Adjoining Commercial
Commercial	25'	25'	50'	Per IBC

	Rear Building Setback Requirements			
Land Use	Rearing Thoroughfare	Rearing Collector	Adjoining R-1 – R-2 Single Family	Adjoining Commercial
Office	10'	10'	50'	10'
Retail	10'	10'	50'	10'

4.16.07. Building height: No building or structure shall have a finished floor whose elevation exceeds 74 feet 11 inches above finished grade. Structures exceeding 50 feet in height shall require a conditional use permit and shall be set back from properties zoned R-1 and R-2 a distance equal to the height of the structure. This setback shall not apply to church steeples, spires, belfries, cupolas, or other normal appurtenances usually required to be placed above the roof level and not intended for human occupancy.

4.16.08. Buffering and screening:

A. Special Landscape Area: (Graphic 4-A delineates the Special Landscape Area boundaries) the area within 50' of contiguous and adjoining R-1 zoned properties located in the Special Landscape Area shall meet the following standards:

1. Pervious, landscaped area

2. No drives or parking

3. No commercial or retail use

4. Irrigated and maintained by the owner thereof in good order, appropriately trimmed and clear of trash/debris.

B. Special Screening /Buffering: Along the Boundary with contiguous and adjoining R-1 zoned properties located in the Special Landscape Area, the following requirement shall apply:

1. 8' masonry wall without openings

2. Trees no shorter than 8’ tall and in a quantity of no less than one tree per four feet of boundary wall shall be planted, maintained, and replaced as required. The lay out shall be approved by the City Planning Director at the time of plan approval for the Project. The trees shall be appropriately irrigated.

C. Special Setbacks for Certain Uses: The following uses must be setback 75’ from the following distances from contiguous and adjoining R-1 zoned properties located in the Special Landscape Area:

1. Loading Docks

2. Trash Dumpsters

3. Open Storage

Graphic 4-A
Special Landscape Area

4.16.09. Outside storage and display: Outside storage, display, and sales is only permitted for Single Tenants that exceed 50,000 SF of Gross Interior Square Footage. Outside Storage must be screened from view from all public streets with the use of screening walls, landscaping, or berms. Outside display and sales areas must be out of traffic circulation areas and maintained at all times to keep the area clean and free of debris and trash.

4.16.10. Parking: Concrete paving on any Lot shall be used for all paving surfaces of sufficient thickness to withstand the anticipated commercial traffic based on sound Geotechnical Engineering recommendations for the Lot. Paint Striping for Fire Lanes shall be per City requirements. Paint Striping for Parking and Traffic Control shall be 4" in width, White Traffic Paint, of the Best Commercial Quality. Pavers are required at all driveway entry points from a Public Right Of Way. Pavers shall be set on recessed 7" paving according to City standards. Pavers to start 15' inside of the Lot and extend to 25' inside the Lot and run the full width of the driveway. Pavers shall be modular concrete pavers, "Holland Stone – Antique Buff" color by Pavestone or approved equivalent. Paver areas shall be framed with 2 Soldier courses and then filled in with a Parquet pattern. Required parking shall be in accordance with Section 5, specifically including Section 5.04, Table 5-C, "Required Parking Spaces by Land Use Category" of Appendix "A" of the Code of Ordinances.

4.16.11. Landscaping: Each Lot shall have to be landscaped in accordance with the following guidelines and include a complete irrigation system. Preservation of healthy and desirable trees is encouraged where reasonable and should be considered in the design and layout of each Lot.

A. Plants shall be selected from Table 4-A "Approved Plant List". These materials have been selected because they are generally native, drought resistant, and non-invasive. These same characteristics should be considered for seasonal color plantings also. Landscaped Islands, Setback Areas, and Green Spaces to include Solid Sod Bermuda Grass where mulched beds are not used.

B. All Plant material shall be sound, healthy specimens typical of their species, free from injurious insects or disease. Plant proportions shall be those recognized as normal for a well grown plant of that species and size, as used by the American Standard for Nursery Stock. Caliper for sizes shall be taken on the trunk 6" to 12" above natural ground.

C. Street Trees and Shrubs: One Tree will be required for every 50' of Street Frontage per Lot to be placed in the Landscape Setback. These trees can be clustered for planting so long as the quantity is met. Street Trees shall be 65 gallon, 3 ½" minimum caliper, and 12'-14' in height at time of planting. (Street Trees and Shrubs will not be required for SH 146 Frontage.) Twenty-five (25) shrubs will be required for each 75' of Street Frontage per Lot to be placed in the Landscape Setback. These shrubs shall be planted at 36" on center. Shrubs shall be minimum 3 gallon size.

D. Planting Islands: Parking rows should have Landscaped Islands on each end of the rows which shall contain one to two trees in each island depending on the reasonable planting and island size. If, at anytime, the required vegetation becomes diseased, deteriorated, or dies, the owner of the premises must replace the vegetation within 30 days of written notice of the city.

Table 4-A
Approved Plant List

APPROVED PLANT LIST

Small Trees	Common Name	Reforestation Species
Bumelia celastrina	Tropical Buckthorn	Yes
Cercis canadensis	Redbud	Yes
Chionanthus virginicus Fringe Tree		
Comus florida	Dogwood	
Diospyros virginiana	Eastern Persimmon	
Hamameys Virginiana	Witch Hazel	
Lagerstroemia indica	Crepe Myrtle	
Malus Spp.	Crabapple	
Pistacia texana	Texas Pistache	Yes
Prunus mexicana Mexican Plum		
Pyrus calleryana bradfordii	Bradford Pear	
Sophora spp.	Mountain Laurel	

Medium & Large Trees

Acer Rubrum "Drummondii"	Swamp Maple	Yes
Betula nigra	River Birch	
Carya illinoinensis	Pecan	
Celtis laevigata	Southern Hackberry	Yes
Fraxinus americana	White Ash	
Fraxinus pennsylvanica	Green Ash	Yes
Juglans nigra	Black Walnut	
Liquidamber styraciflua	Sweetgum	Yes
Liriodendron tulipifera	Tulip Tree	
Magnolia grandiflora	Southern Magnolia	
Ostrya virginiana	American Hop Hornbeam	
Pinus taeda	Loblolly Pine	Yes
Platanus mexicana	Mexican Sycamore	
Platanus occidentalis	American Sycamore	
Quercus falcata	Swamp Red Oak	Yes
Quercus glaucoides	Lacey Oak	
Quercus michauxii	Swamp Chestnut Oak	
Quercus macrocarpa	Bur Oak	Yes
Quercus shumardii	Shumard Oak	
Quercus texana	Red Oak	
Quercus texana nuttall	Nuttall Oak	Yes
Quercus virginiana	Live Oak	
Sabal Texana (Mexicana)	Texas Sabal	
Taxodium distichum	Bald Cypress	Yes
Ulmus crassifolia	Cedar Elm	Yes

Shrubs, Dwarf Shrubs & Plants

Azalea	Azalea	
Abelia grandiflora prostrata	Dwarf Abelia	
Berberis thumbergii	Pigmy Barberry	
Gardenia radicans	Dwarf Gardenia	
Hesperaloe parviflora	Red Yucca	
Ilex Spp.	Holly-Yaupon	
Lantana horrida T	exas Lantana	
Nandina domestica nana	Dwarf Nandina	
Poliomintha longifolia	Mexican oregano	
Penstemon baccharifolius	Red Penstemon	
Pittosporum tobira	Dwarf Pittosporum	
Rosemarinus officinalis	Rosemary	
Salvia leucantha	Mexican Brush Sage	

Small Shrubs & Plants

Abelia Spp.	Abelia	
Anisacanthus wrightii	Hummingbird Bush	
Aucuba japonica	Aucuba	
Buxus Spp.	Boxwood	
Callicarpa americana	American Beauty Berry	Yes
Chaenomeles japonica	Flowering Quince	
Gardenia Spp.	Gardenia	
Hydrangea macrophylla	Hydrangea	
Opuntia compressa	Lowprickly pear cactus	
Malvaviscus drummondii	Turk's Cap	Yes
Opuntia engelmannii texana	Flaming prickly pear cactus	
Opuntia engelmannii linguiformis	Cow's tongue prickly pear cactus	
Opuntia leptocarpa Mackenson	prickly pear cactus	
Pavonia lasiopetala	Rock Rose	
Pistacia texana	Texas Pistachio	Yes
Raphiolepis indica	Indian Hawthorne	
Spiraea prunifolia	Bridal Wreath Spirea	
Yucca pallida	Paleleaf Yucca	
Yucca torreyi	Spanish Bayonet Yucca	

Medium Shrubs & Plants

Azalea indicum Indica	Azalea	
Buddleia Spp.	Butterfly Bush	
Camellia Spp.	Camellia	
Elaeagnus fruitlandi	Silverberry	
Feijoa sellowiana	Pineapple Guava	
Hibiscus coccineus	Texas Star Hibiscus	Yes
Hibiscus syriacus	Althea	
Ilex Spp.	Holly-Yaupon	Yes
Ilex decidua	Possumhaw	Yes
Jasminum Spp.	Jasmine	
Lagerstroemia indica "dwarf"	Dwarf Crepe Myrtle	
Leucophyllum frutescens	Texas Sage	
Lonicera fragrantissima	Winter Honeysuckle	

Malvaviscus drummondii	Turk's Cap	Yes
Crinum americanum	Crinum Lily	
Liriope Spp.	Lily Turf	
Lupinus texensis	Bluebonnet	
Lantana camara	Lantana	
Ophiopogon japonicum	Monkey grass	
Opuntia compressa	Low prickly pear cactus	
Opuntia engelmannii texana	Flaming prickly pear cactus	
Opuntia engelmannii linguiformis	Cow's tongue prickly pear cactus	
Opuntia leptocarpa	Mackenson prickly pear cactus	
Osmunda cinnamomea	Cinnamon Fern	Yes
Osmunda regalis	Royal Fern	Yes
Saururus cernuus	Lizardtail	
Sedum Spp.	Sedum	
Verbena peruviana	Peruvian Verbena	
Vinca minor and major	Vinca	
Woodwardia aereolata	Chain Fern	Yes

Grasses Lawn and Ornamental

Cynodon dactylon	Common Bermuda	
Buchloe dactyloides	Buffalo Grass	
Bouteloua gracilis	Blue Grama	Yes
Bouteloua curtipendula	Sideoats Grama	
Muhlenbergia capillaris	Gulf Muhly	Yes
Muhlenbergia lindheimeri	Lindheimer Muhly	Yes
Schizachyrium scoparium	Little Bluestem	
Stipa tenuissima	Mexican Feather Grass	Yes

4.16.12. Sidewalks: The pedestrian paving will be constructed either within appropriate public street rights-of-ways and/or within the Landscape Setbacks. All walks must be constructed in a consistent workmanlike manner.

A. Minimum construction requires sidewalks to be four inches (4") thick with #3 reinforcement at eighteen inches (18”) on center both ways. Public Sidewalks located within the City or County right-of -way shall be a minimum of five feet wide. No cold joints are permitted. Complete pours between expansion joints are required. Drill dowels into existing concrete curbs and driveways and use expansion joints with slip dowels at connections of existing and new concrete. Dowels are to be stubbed out where sidewalk is to be continued in the future.

B. Sidewalk elevations shall match with the existing manhole and valve box elevations. If adjustments of the height are required, Owner shall notify the Seabrook Public Works Department (24 hours) prior to sidewalk construction. If adjustments must be made, the Owner-builder/site developer will be responsible for such adjustments. Handicap ramps are required at every street and other locations required by **Americans with Disabilities Act of 1990 (ADA)** as amended.

4.16.13. Site lighting:

A. A lighting photometric drawing, as part of the Lighting Plan, shall be submitted depicting the design layout and illustrating a point-by-point foot-candle lighting to achieve a minimum average level of four foot (4') candles with a maximum/minimum uniformity ratio not to exceed (10:1). All office building lighting will achieve a minimum average lighting level of four foot (4') candles. The types, size, and style of the lighting fixtures shall also appear in the form of a schedule to the Lighting Plan.

B. All parking lot pole mounted lighting shall use the "GE Evolve LED lighting fixture with a minimum wattage of three hundred and fifteen (315) watts. Fixtures and poles shall have a powder-coated finish and shall be black color finish. Standards for parking lots shall be a maximum of thirty-nine feet (39') tall, on a 30" diameter, 30" tall concrete base that is painted white to match the traffic marking paint, and shall have a Glare light shield fixture. The arrangement of parking lot and drive way lights should provide adequate light coverage at all parcel entries and exits.

C. Buildings shall be adequately lit at night. Light fixtures shall be attractive, efficient, and shall not create Glare or spillover into adjacent properties. No flood lights shall be mounted on buildings except for wall packs at the rear of the buildings. Where used, the wall packs must be shielded to prevent light trespass onto adjoining properties.

D. Spillover at perimeter property lines shall be 0.00 foot-candles measured along the property line at a height of 30" above grade. Lighting fixtures located across or adjacent to R-1 and R-2 Single Family Residential Districts shall use "House Side Shields" to minimize glare.

E. Exterior lighting must enhance the atmosphere and safety of all public parking areas, walkways and entrances. Lighting shall be low key and placement of fixtures shall coincide with major walkway areas.

F. Choice of light fixtures and poles, other than parking lot light fixtures, must reflect the theme and architecture of the Project. Structure illumination shall be lit with a concealed, stationary-shielded light source.

G. All areas within the Property must be illuminated with area and decorative lighting continuously during operating hours or from dusk until at least 12:00 a.m. Each Owner of a Tract within the Project shall maintain at least one (1) exterior night light. Where multiple parcels/buildings are under one ownership, for the purposes of this exterior night light requirement, each tract shall be considered a separate tract.

H. Provided however, notwithstanding subsections (A) and (B) above, an applicant may present to the planning and zoning commission, on the site plan, specifications which include alternative materials if they meet or exceed the appearance and atmosphere requirements above and appear better suited under the circumstances.

4.16.15. Signage: Signage in the Overlay District shall be uniform in materials and general appearance.

A. Ground Sign Types: Three types of Multi Tenant on premise Ground Sign types will be allowed and must all be permitted through the City.

1. The signage shall be constructed in accordance with Graphic 4-B and 4-H.

Graphic 4-B
60’ Max Height Multi-Tenant Ground Sign.

Graphic 4-C
50’ Max Height Multi-Tenant Ground Sign.

Graphic 4-D

30’ Max Height Multi-Tenant Ground Sign.

2. The signage shall be located in accordance with Graphic 4-E.

Graphic 4-E
Multi-Tenant Ground Sign Location Map.

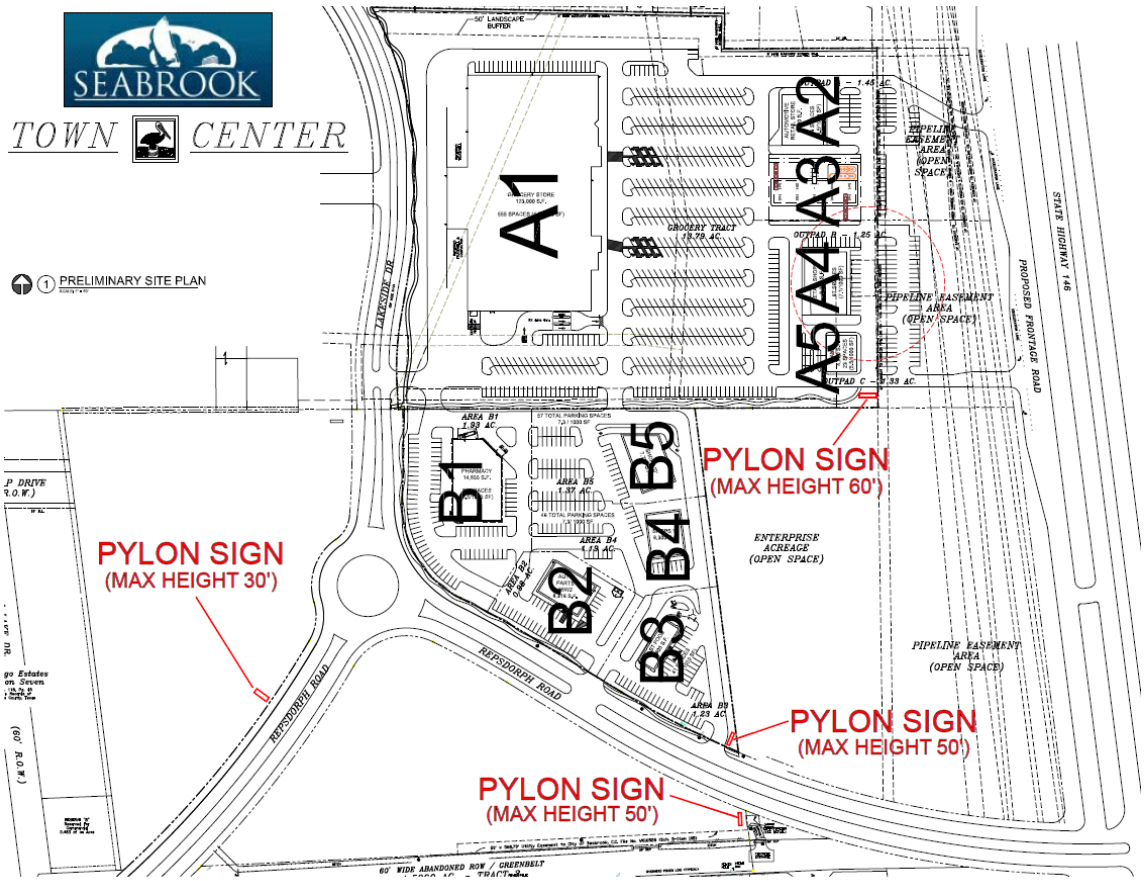

3. Multi-Tenant, Single Lot signage: One sign of this type will be permitted per applicable Lot. A sign of this type shall have a maximum height of 8’ and maximum width of 6’ including all structure and finishes.

Graphic 4-F

4. Single Tenant, Single Lot signage: One sign of this type will be permitted per applicable Lot. A sign of this type shall have a maximum height of 5’ and maximum width of 4’ including all structure and finishes.

Graphic 4-G

B. Building Signs:

1. Lettering shall not exceed 10’ high and must be in proportion to the building facade area on which they are being placed. Sign Area (created as a rectangle around all lettering and images) cannot exceed 80% of the width of the space being identified multiplied by a factor of 2.

2. Multi-tenant building signs lettering shall not exceed 36” when in a single row of text, and 54” total when in two rows of text (providing a 6” space between the two rows).

3. Signs may be Individual Channel Letters or Wireway mounted, provided the Wireway is bottom justified and colored to match the building facade. Box Signs will not be allowed. Internally lit or back lit signs are allowed. Logos will not be permitted except for nationally recognized businesses.

4. Businesses that have frontage on multiple streets shall be allowed one sign per frontage that they face.

C. Directional Signs: Small directional signs may be used where it helps circulation on site. No directions sign shall exceed 6 square feet in size or 36” tall, and lettering should be no more than 4” tall.

Graphic 4-H

4.16.16. External architectural finishes: Buildings located in the Overlay District must be uniform in materials and general appearance.

A. Acceptable Materials: Building Exterior Finishes, other than fenestrations, shall consist of Stone, Brick, Stucco, EIFS, Metal Panels, Painted Concrete Wall Panels, Painted or Decorative Concrete Block, and Cement Board Rain Screen Systems. A minimum of 18% of each façade shall consist of Brick or Stone. Main Field Colors should consist of earth-tone colors.

B. Specific Colors: When used in the facade of a building, Stone is to be Texas White Limestone in Random Ashlar Pattern, Brick is to be ACME Cinnamon Brown, Standing Seam Metal Roofing shall be Sierra Tan by Berridge Roofing, Aluminum Storefront is to be Clear Anodized, and Painted Concrete Block or Painted Concrete Wall Panels are to have heavy texture.

4.16.17. Supplementary regulations:

A. Dumpster enclosures: All trash and utility areas shall be screened from public view and backyard views with masonry wall and can also be further screened by landscape and other devices. Trash areas and dumpster locations shall be permanently fenced or screened with enclosures per Exhibits 2 thru 4 so that trash container / dumpster shall not be visible from any public street.

1. The enclosures shall be constructed in accordance with Graphic 4-I thru 4-L and kept closed at all times other than at trash pick-up times.

Graphic 4-I
Dumpster Enclosure

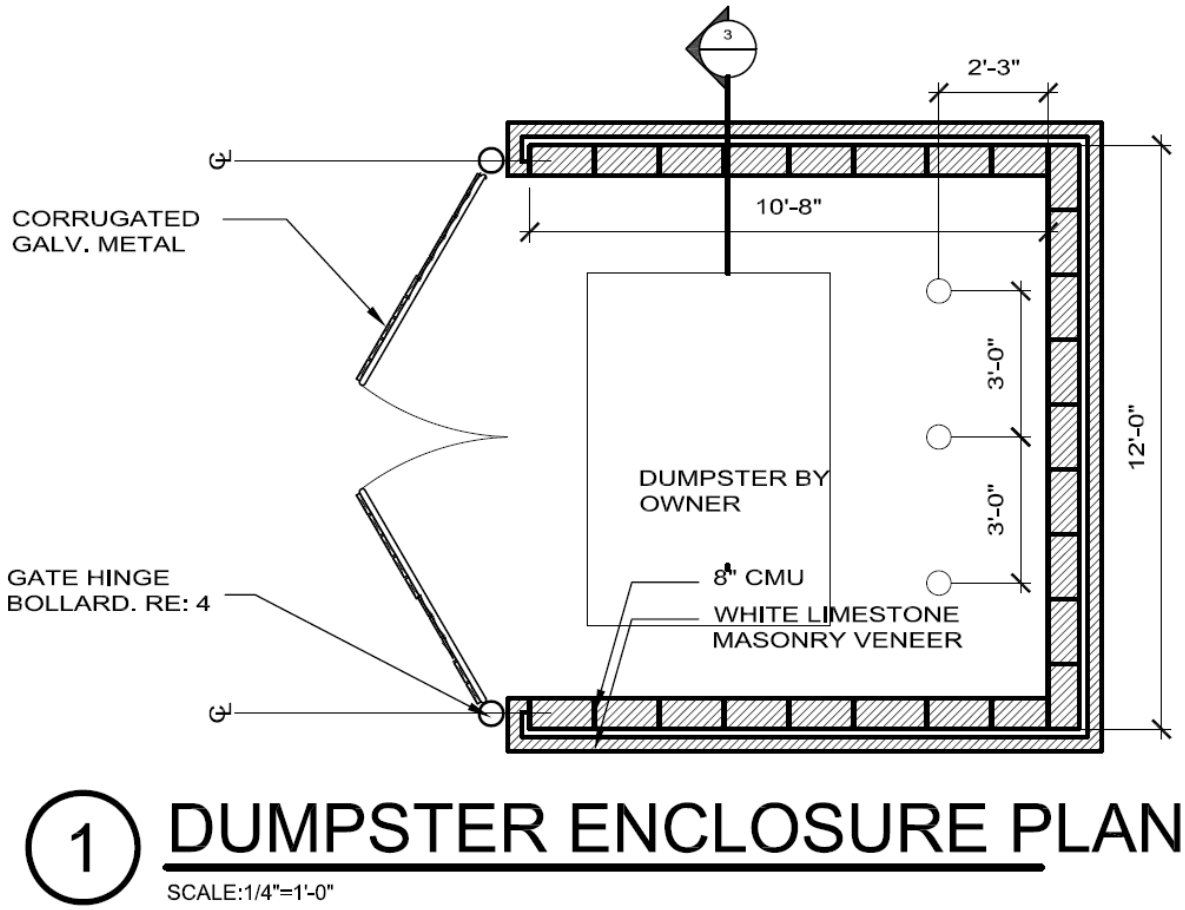

Graphic 4-J
Dumpster Enclosure

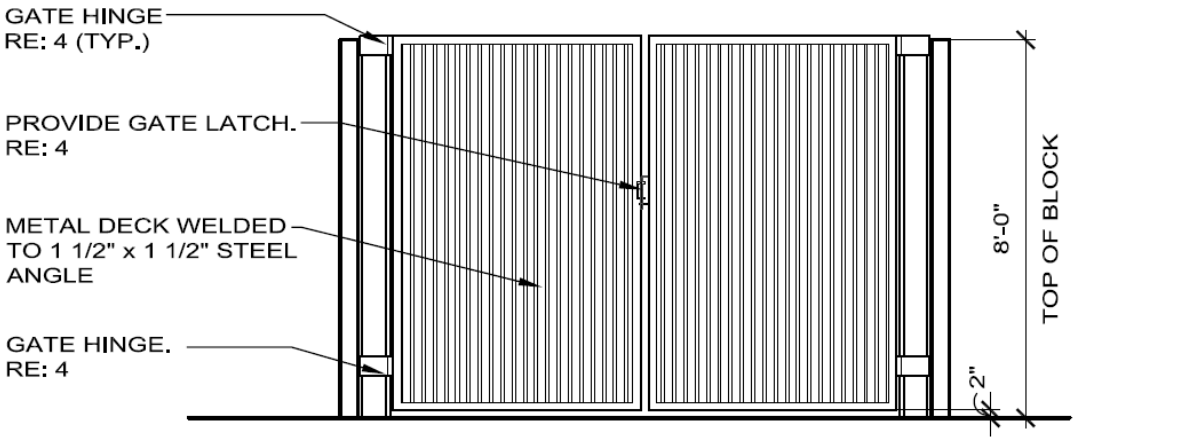

2 DUMPSTER ENCLOSURE PLAN

SCALE:1/4"=1'-0"

Graphic 4-K
Dumpster Enclosure

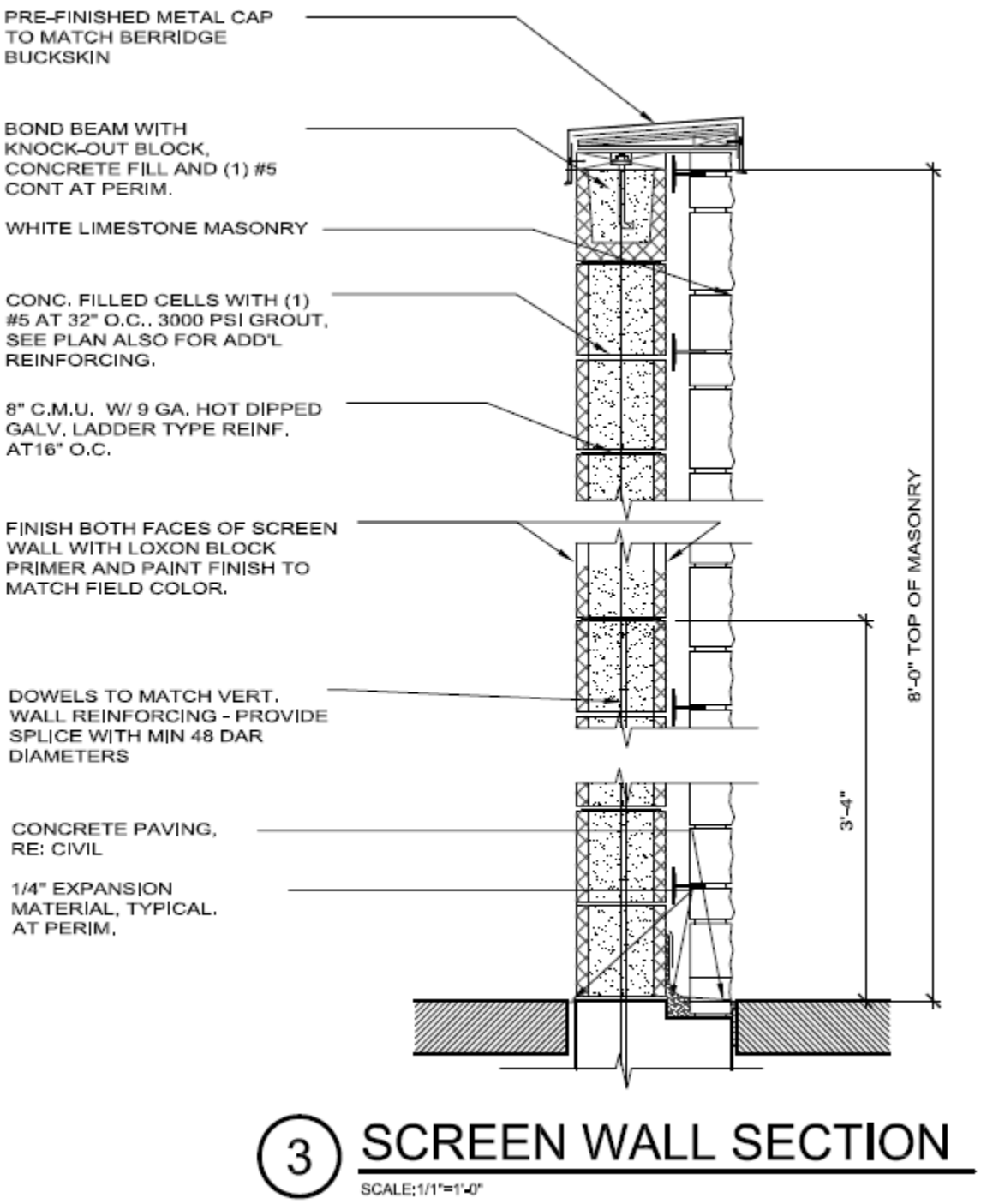

3 SCREEN WALL SECTION

SCALE: 1/1"=1'-0"

Graphic 4-L
Dumpster Enclosure

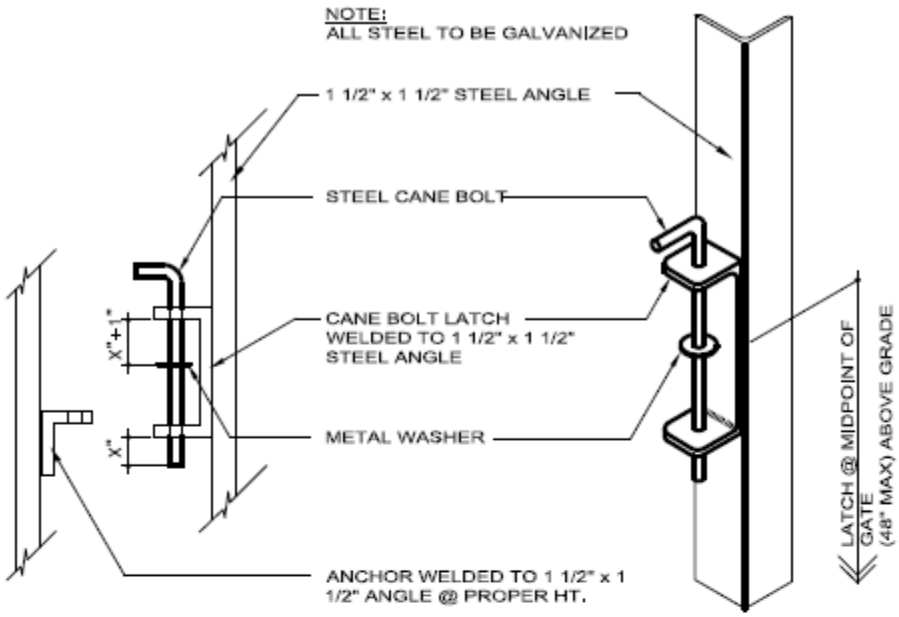

GATE LATCH DETAIL

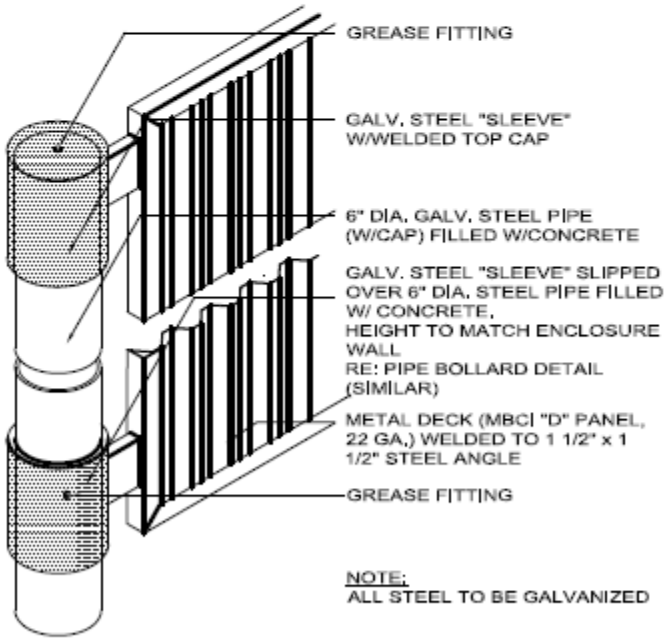

GATE HINGE DETAIL

4 GATE LATCH DETAIL

SCALE: N.T.S.

B. Temporary structures: Structures for uses incidental to construction work on the premises which are removed upon completion or abandonment of construction work are allowed upon permit from the building official.

C. Temporary structures: No structures, including recreational vehicles, construction trailers, or travel trailers may be used for on-site dwelling purposes.